## Stored Beam Current Monitor (SBCM):

The SBCM is an accredited safety system and part of the Top-Off Safety System (TOSS) at the NSLS-II facility. The Top-Off feature for the Storage Ring allows for automated injection of beam at roughly 2-minute intervals while operations are in progress. This ensures that the stored electron beam intensity stays within 1% of its nominal value (usually 500mA). In this mode of operation, stable beam can be provided to the users for many consecutive days without interruptions to their research programs. Part of the TOSS requirements is to ensure that injections only occur while there is at least 50mA of stored beam circulating in the storage ring. The SBCM was designed to make this determination. The SBCM provides a set of relay contacts that will close whenever there is more than 50mA of stored electron beam. These contacts must open whenever the stored beam is below 50mA. The SBCM is a dual-chain device making a redundant measurement of the beam current. Below is a block diagram of one chain:

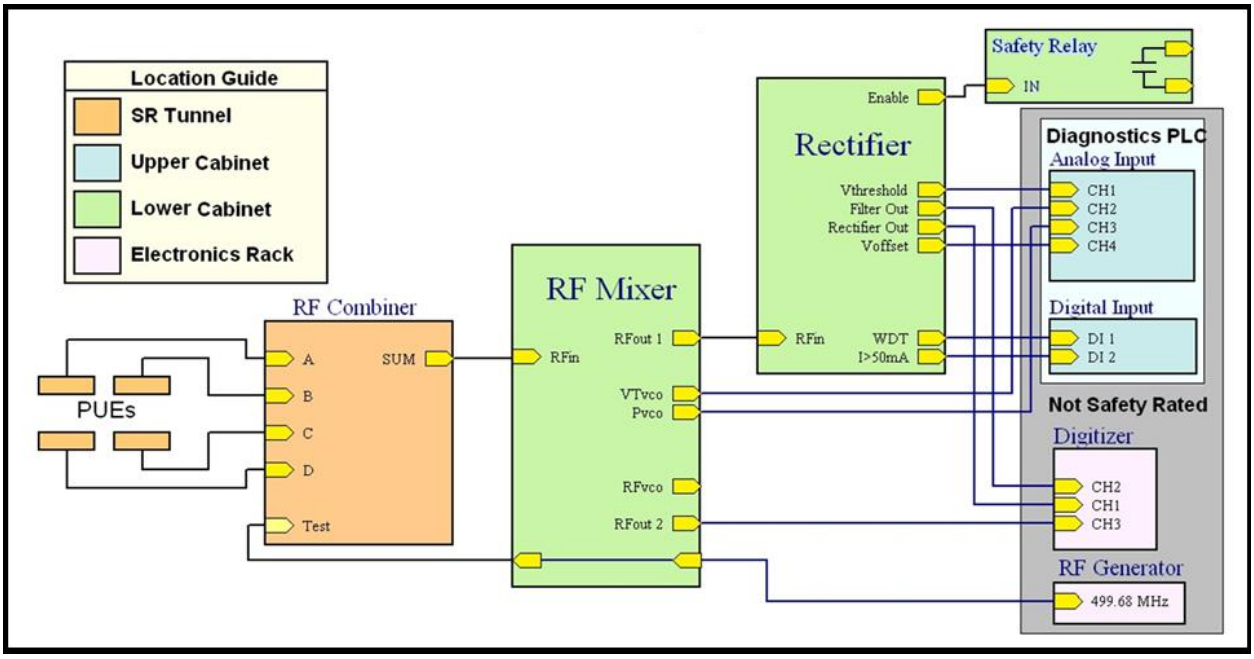


## RF Combiner Module:

The RF Combiner Module is mounted in the Storage Ring on the side of the girder. It takes as inputs the four PUE signals from the BPM buttons along with a test input for fake beam.

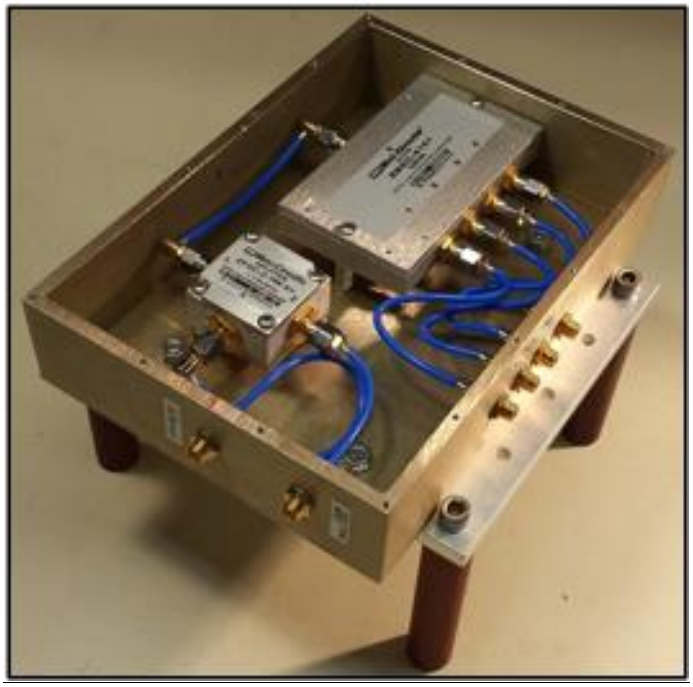

The block diagram is shown below. There is a 4 to 1 Combiner and a 2 to 1 Combiner used to sum all 5 input signals. The single output is sent to the RF Mixer Module for one chain of the SBCM interlock.

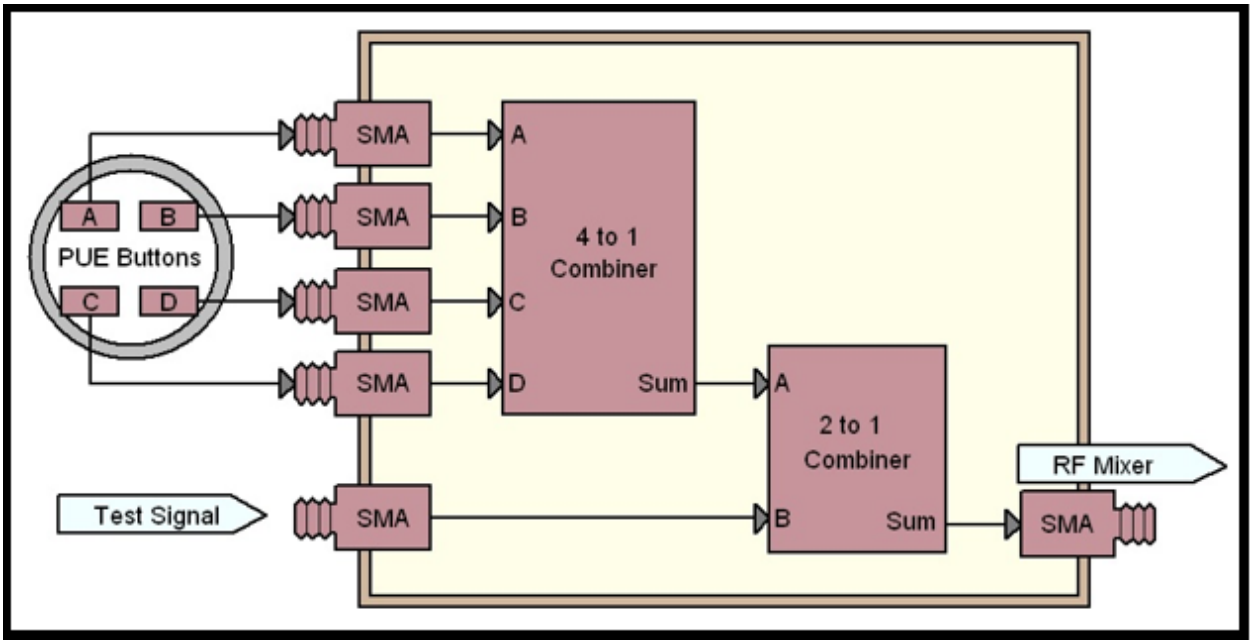

# RF Mixer Module:

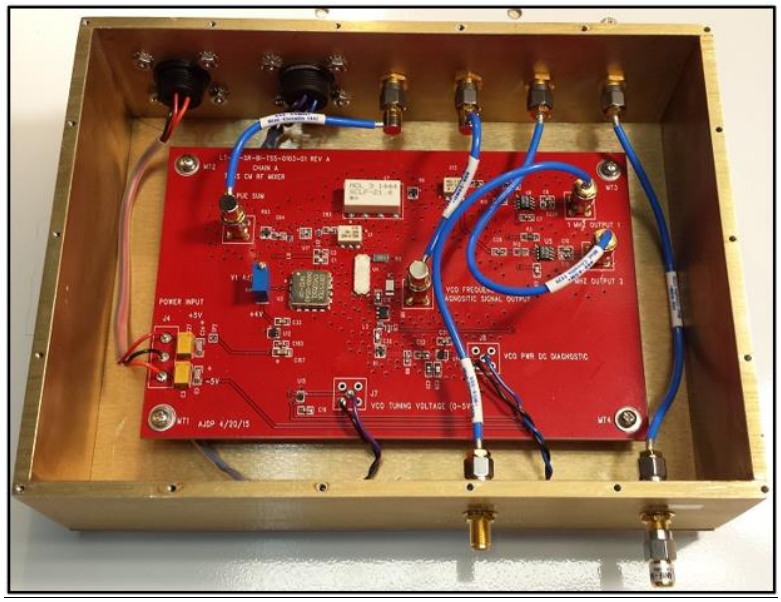

The block diagram for the RF Mixer Module is shown below:

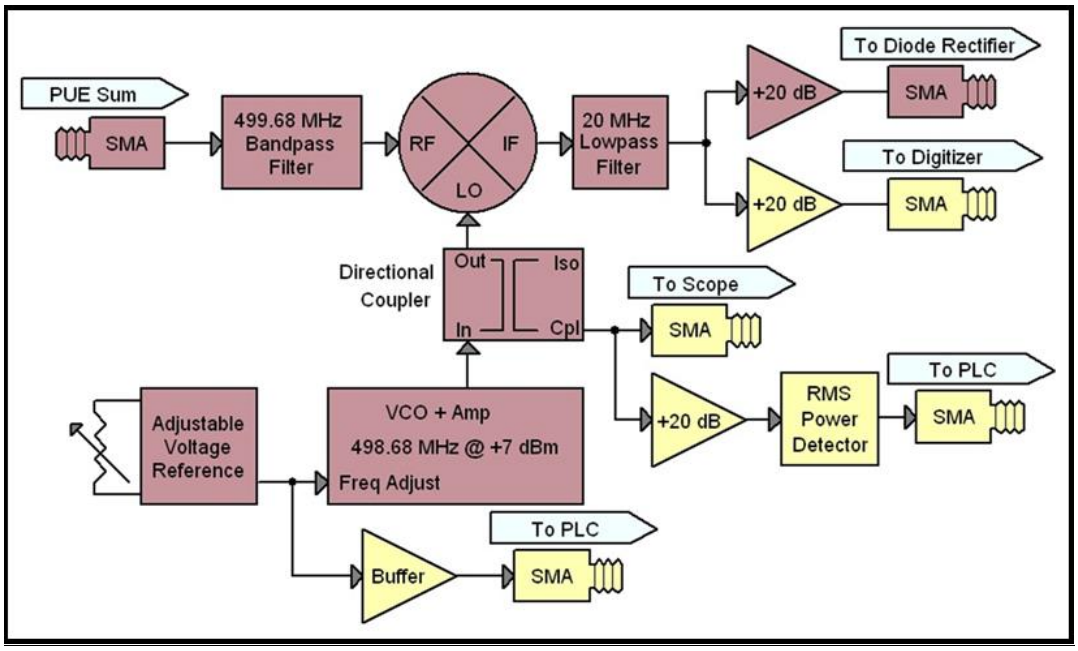


The output of the Combiner Module forms the input to the Mixer Module which is passed through a 500MHz BPF before being mixed with a VCO tuned to 498MHz. The output of the mixer contains RF signals at 998MHz and 2MHz. A 11MHz LPF passes only the 2MHz signal which is then passed on to the RF Rectifier Module. This process downconverts the 500MHz signal to 2MHz. The information about the electron beam intensity is preserved in this process. Below is a more detailed explanation of the circuitry for this module.

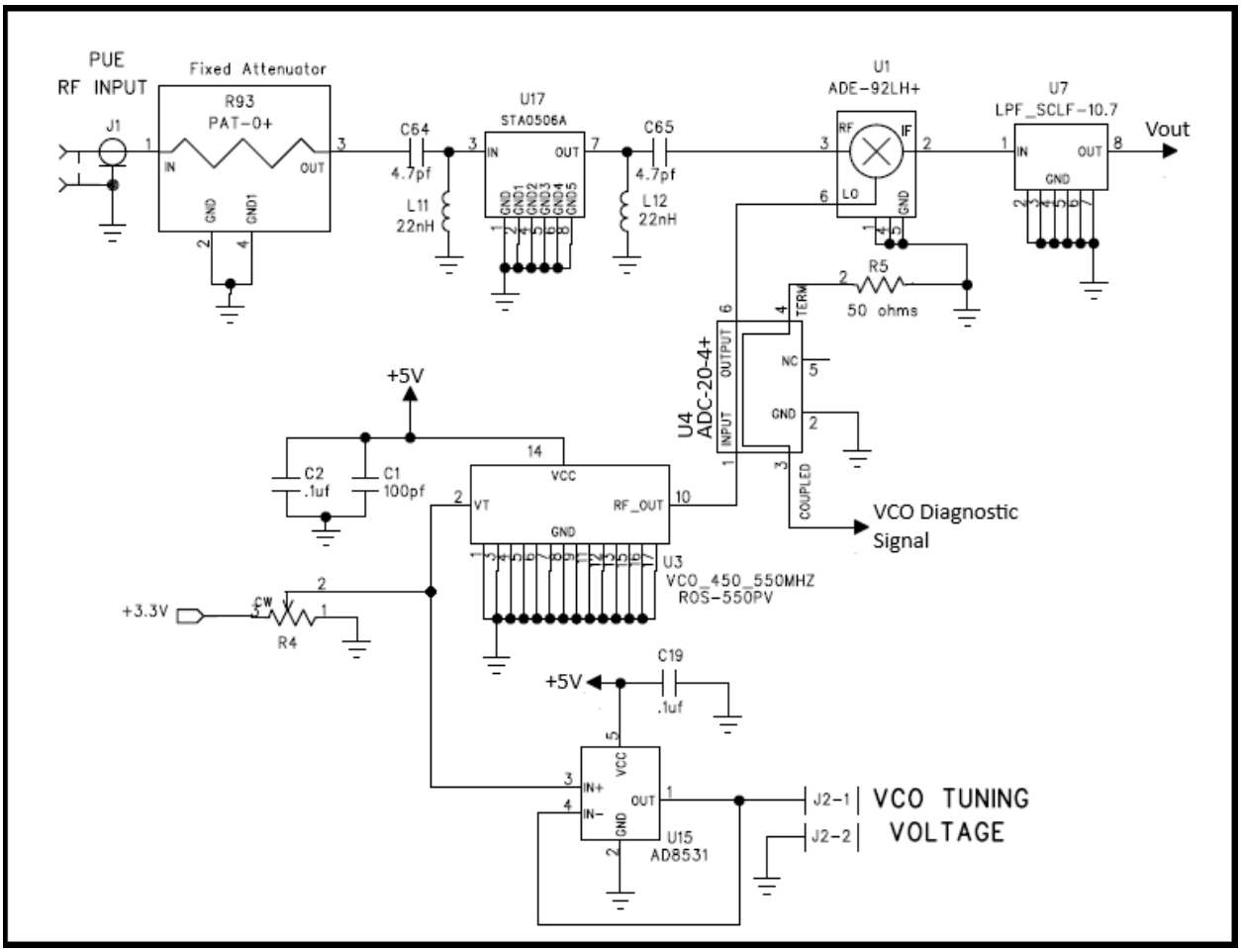


The RF input from the Combiner Module passes through a 500MHz BPF (U17) and is sent to an RF Mixer (RFin on U1). A VCO is tuned to 498MHz using the trimpot at R4. There is an RF Coupler (U4) which provides a diagnostic signal allowing monitoring of the VCO output frequency and power. The VCO output goes to the local oscillator input of the mixer (LO on U1). The mixer essential multiplies the $RF_{in}$ and the LO as follows:

$$RF_{in} = A(t)cos(2\pi f_{BM}t) \quad and \quad LO = cos(2\pi f_{LO}t)$$

$$with \quad f_{BM} = 500, f_{LO} = 498$$

For simplicity we assume the amplitude of the local oscillator is fixed and equals 1. We will also ignore any arbitrary phase. $A(t)$ is the amplitude of the beam signal which can vary with time.

$$MX_{out} = A(t)cos(2\pi f_{BM}t)\ cos(2\pi f_{LO}t)$$

Apply some basic trigonometry to get:

$$MX_{out} = \frac{A(t)}{2}[cos(2\pi(f_{BM} + f_{LO})t) + cos(2\pi(f_{BM} - f_{LO})t)]$$

$$MX_{out} = \frac{A(t)}{2}[cos(2\pi(998MHz)t) + cos(2\pi(2MHz)t)]$$

This signal goes to an 11MHz LPF which will effectively block the 998MHz part of the mixer output leaving:

$$MX_{out} = \frac{A(t)}{2}[cos(2\pi(2MHz)t)]$$

This signal is passed to an RF splitter (U13) and then to RF drivers as shown below:

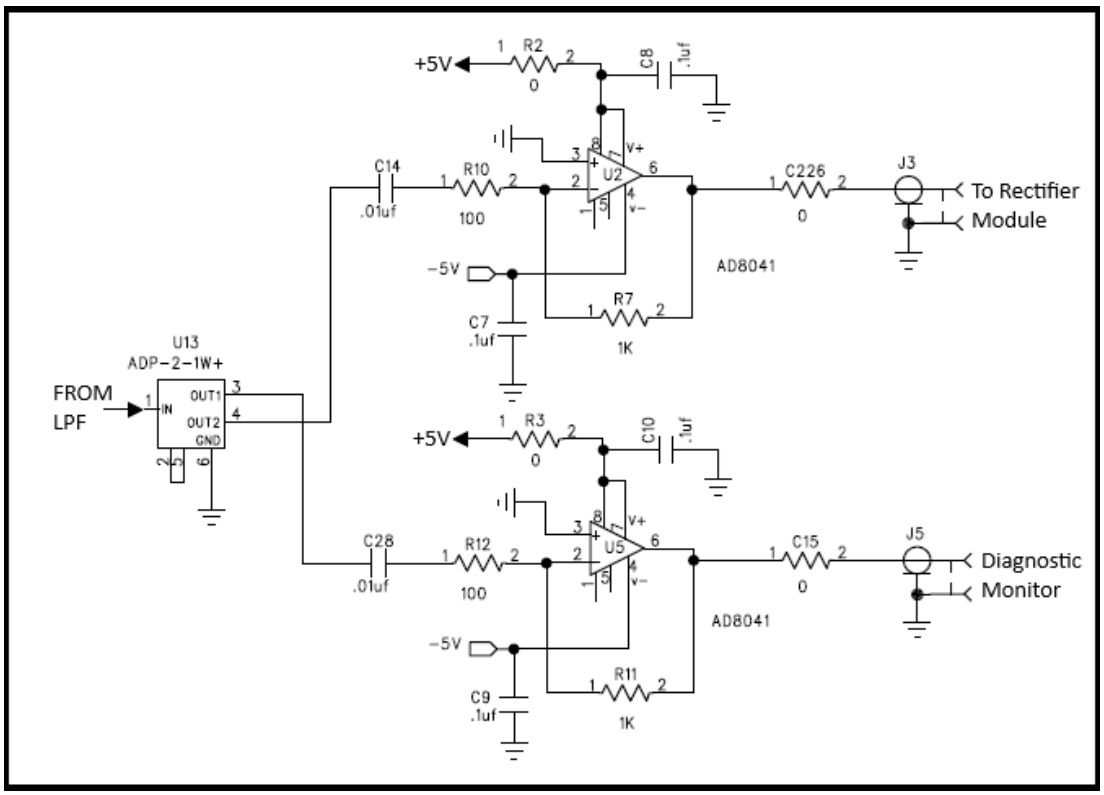


The SMA output at J3 is sent to the RF Rectifier Module input to be processed further. The SMA output at J5 is connected to an external digitizer to provide diagnostic monitoring of the downconverted RF output of the Mixer Module.

Monitoring the VCO coupled output is accomplished using the circuit shown below:

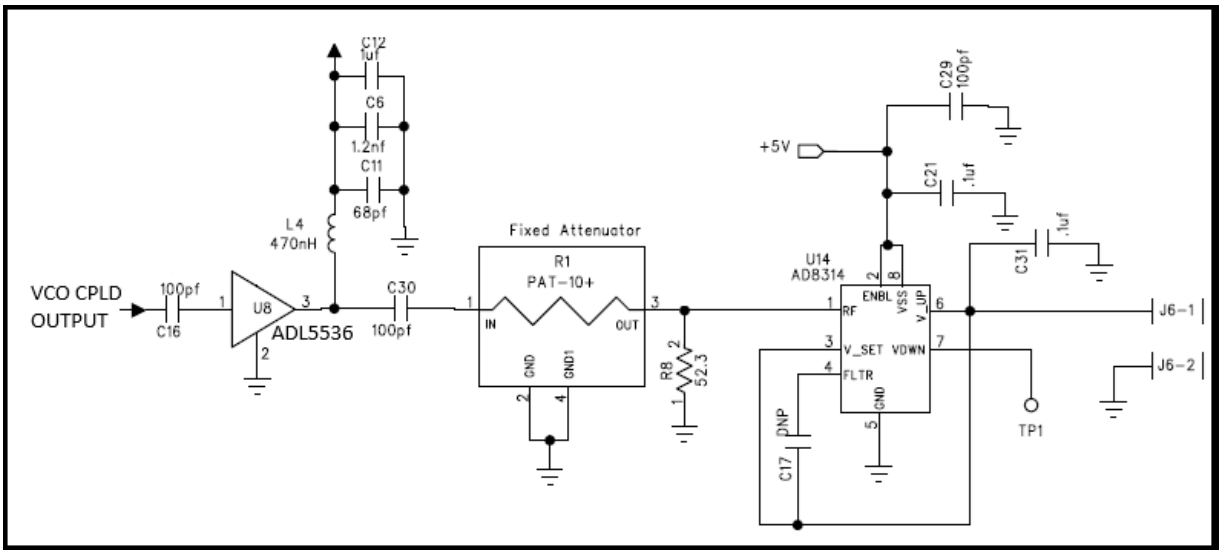


The amplifier at U8 has a fixed 20dB gain which is followed by a 10dB attenuator (R1). U14 is an RF Detector and the output at pin 6 is proportional to the amplitude of the VCO output frequency of 498MHz. The output level of this signal should never significantly change, and it is diagnostically monitored by a PLC.

The image below shows the PUE sum input to the Mixer Module in BLUE and the downconverted 1.8MHz output signal that is sent to the Rectifier Module. The image contains 8 turns of data from the storage ring (about 20 uSecs of data).

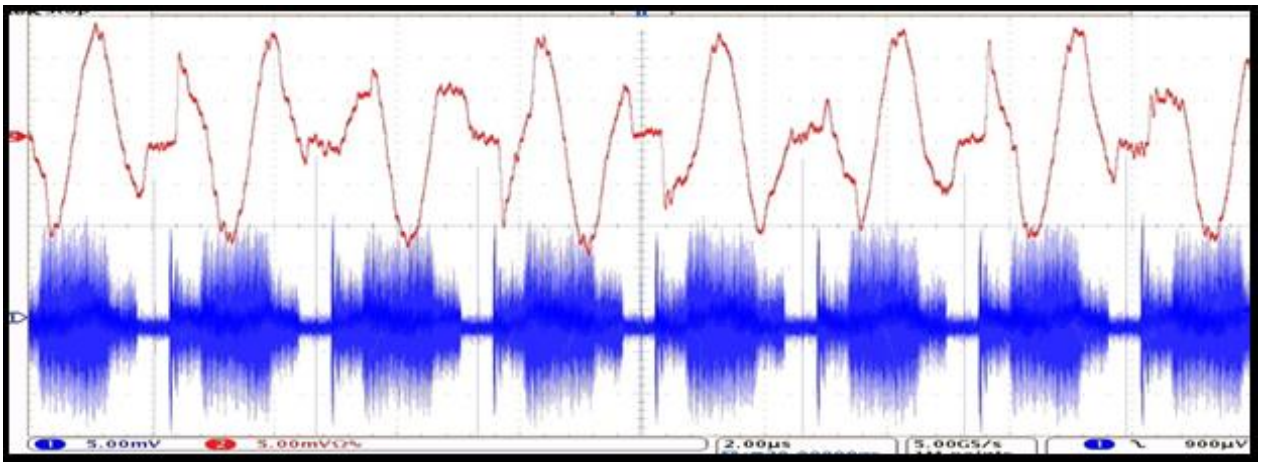

## RF Rectifier Module:

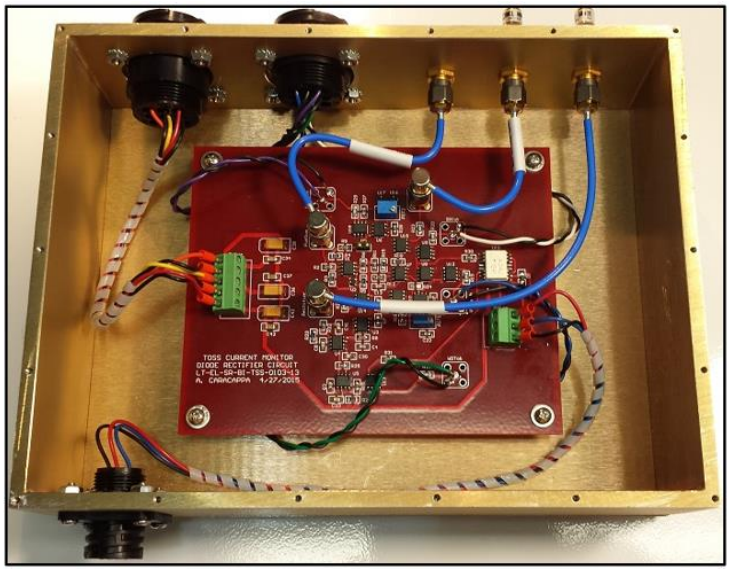

A simplified block diagram is shown below:

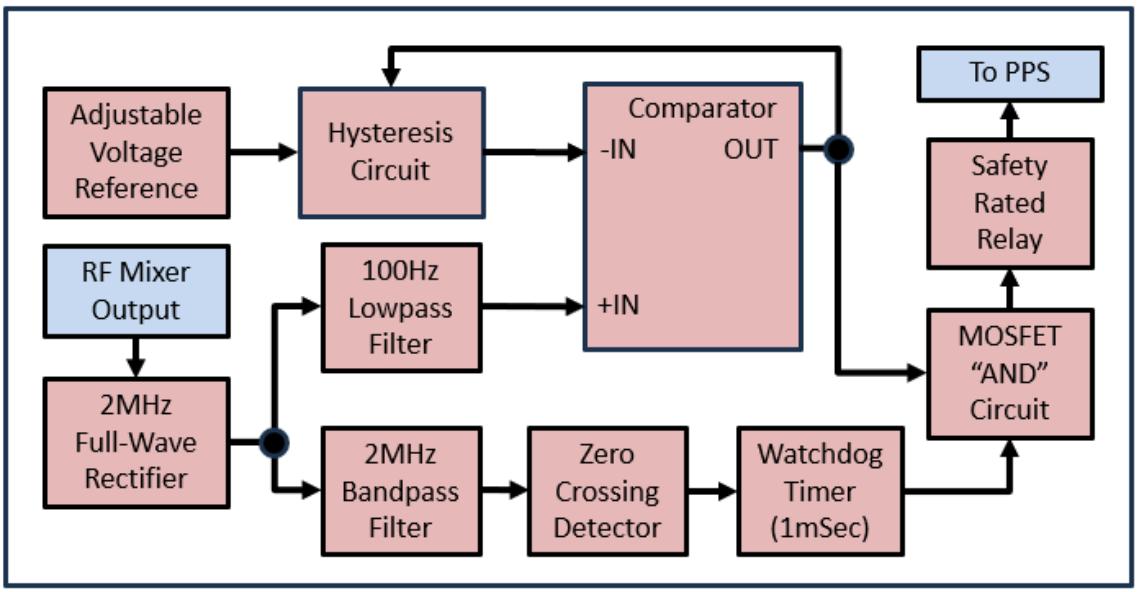


The output of the RF Mixer Module is a 1.8MHz signal. This module will full-wave rectify the input and then split to two separate paths. The first path brings the rectified signal to a 100Hz low-pass filter (LPF) and then to a comparator where it is compared to a voltage level equivalent to the minimum allowable stored electron beam current in the Storage Ring during TOSS operations. This voltage level is referred to as the threshold. A hysteresis circuit is applied to the threshold by feeding back the output of the comparator to reduce the susceptibility to noise which might affect the performance of the safety-rated relay. The second path brings the rectified signal to a band-pass filter (BPF) and then to a zero-

crossing detector. The zero-crossing detector output is HIGH whenever the input is above a very low threshold, and it is LOW whenever it is below this threshold. The watchdog timer (WDT) is a retriggerable one-shot circuit which will remain HIGH if it gets a transition from LOW to HIGH at least once every millisecond. The outputs of the two pathways go to a power MOSFET circuit which is the equivalent of a logical AND circuit. If both inputs to this AND are HIGH then the Safety-Rated Relay will close the contacts which connect to the NSLS2 PPS. Below are more detailed descriptions of the circuitry involved in each section of the block diagram.

## Full-Wave Rectifier Circuit:

The schematic diagram of the active full-wave rectifier is shown below:

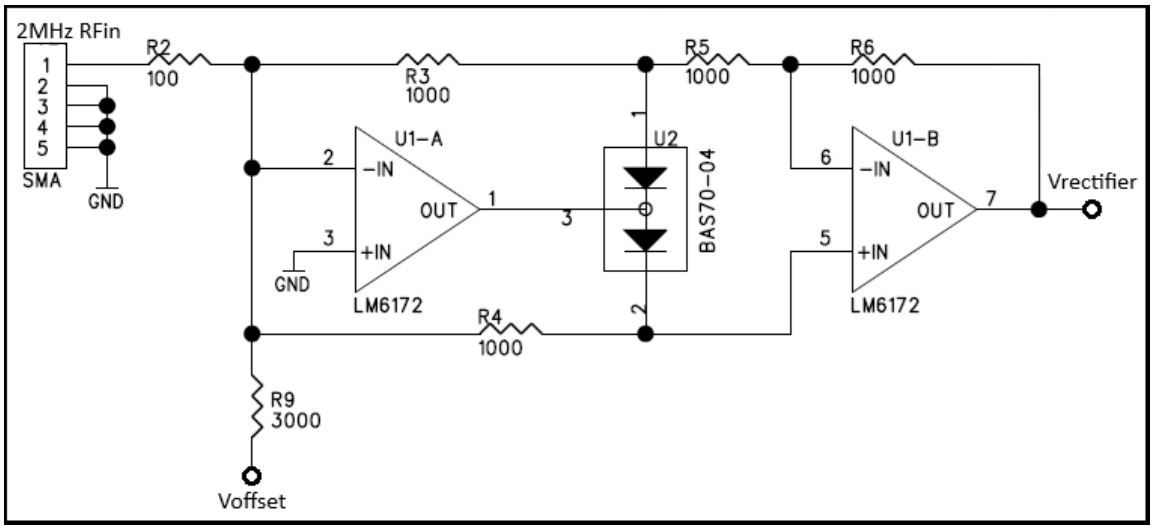


For now, we will ignore the offset voltage (Voffset). If $(RF_{in} > 0)$ then the simplified circuit is as follows:

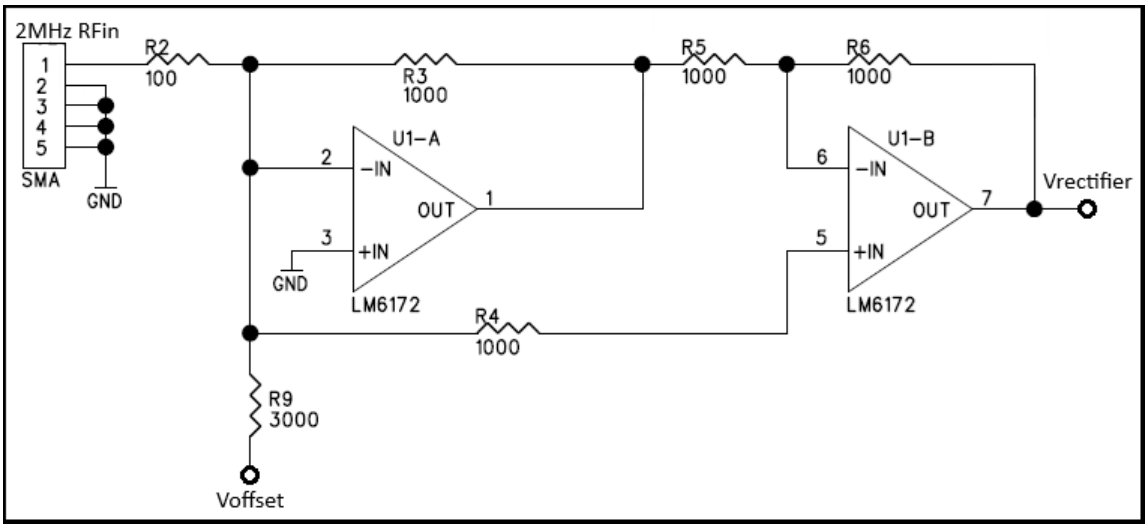

The first amplifier has a gain of -R3/R2 and the second amplifier's gain is -R6/R5 so the output of the circuit for $(RF_{in} > 0)$is:

$$G(RF_{in} > 0) = \frac{R3 * R6}{R2 * R5}$$

If $(RF_{in} < 0)$ then the simplified circuit becomes:

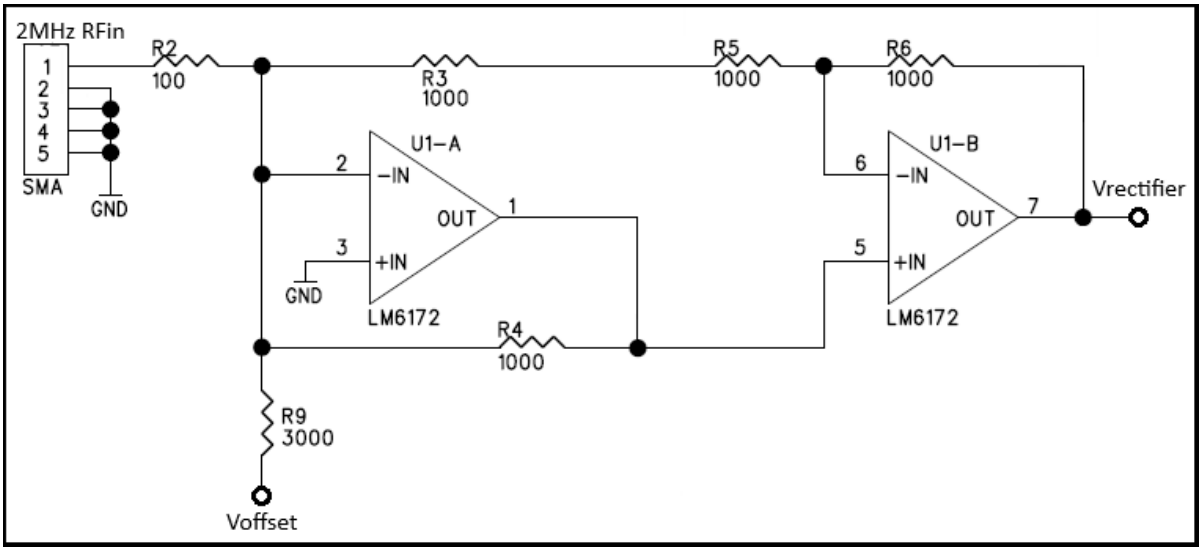


The gain of the first amplifier is -R4/R2. The output feeds the positive input of the second amplifier, so the gain of the second amplifier becomes $\left(1 + \frac{R6}{(R3+R5)}\right)$. The output of the circuit for $RF_{in} < 0$ is:

$$G(RF_{in} < 0) = -\frac{R_4}{R_2}\left(1 + \frac{R_6}{(R_3 + R_5)}\right)$$

The gain is negative but since the input is also negative the product yields a positive voltage. Note that for the component values shown in the circuit the gains would be:

$$G(RF_{in} > 0) = 10$$

$$G(RF_{in} < 0) = -15$$

Using the resistor values currently in use the full-wave rectification is asymmetric. To balance the rectifier R6 should be changed to 2000 Ohms and R2 should be changed to 200 Ohms. The gains will then become:

$$G(RF_{in} > 0) = 10$$

$$G(RF_{in} < 0) = -10$$

The images below show the input to the full-wave rectifier circuit and the output generated by the rectifier. Note the asymmetry in the rectified signal which is due to non-optimized resistor values used in the circuit. If these resistors are changed to the values determined in the analysis above, then the rectified signal will be balanced. Even with the asymmetry, the accuracy of the measurement meets the requirements.

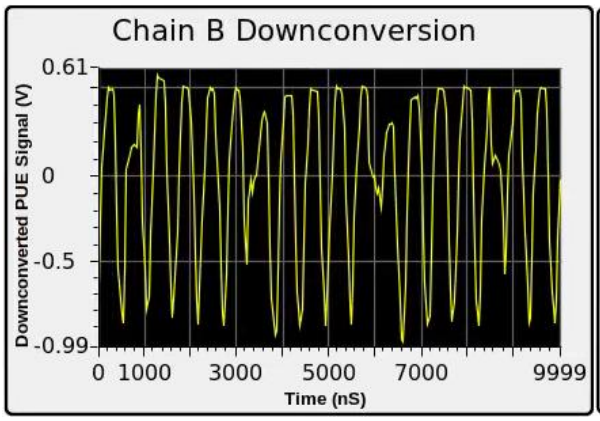


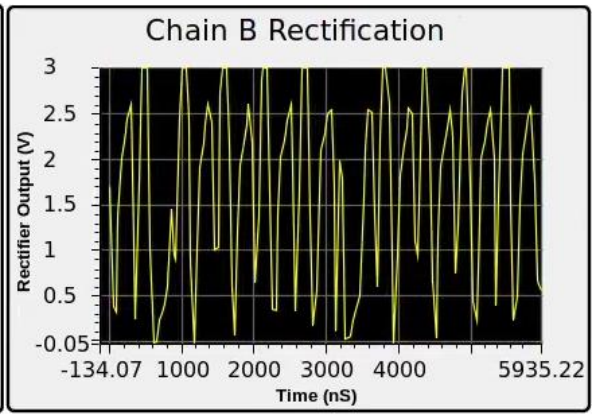


The circuit generating the offset voltage is shown below:

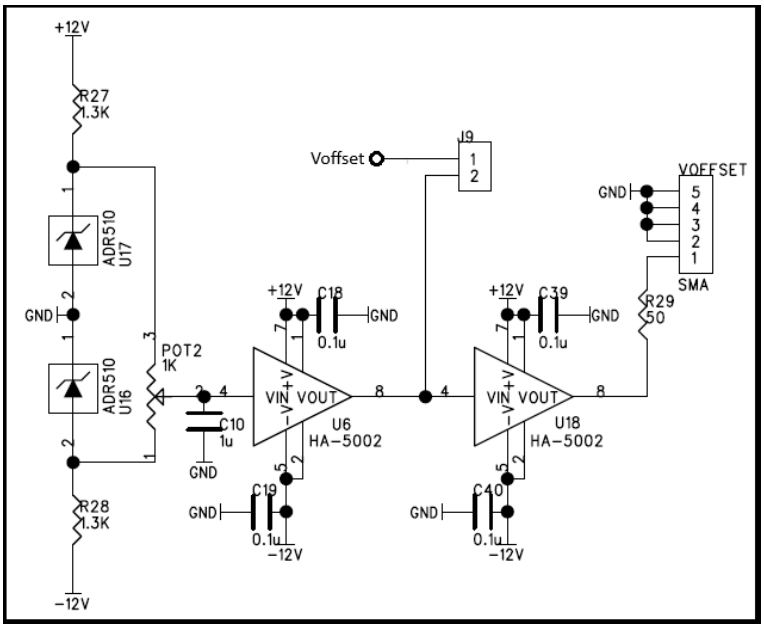


The Zener diodes (U16 and U17) will ensure the voltage across the trimpot (POT2) are +1.25 and -1.25 volts. The user can adjust Voffset between these two values and the buffer amplifiers will drive the output to the rectifier circuit and to a PLC for monitoring. The gain through the rectifier circuit seen by the offset voltage (Voffset) depends on whether this voltage is positive or negative. Voffset will see the same gains shown above and will add to the output generated by the RF input. The Voffset is used to null out any DC offset seen by the low-pass filter in the next stage.

Low-pass Filter Circuit:

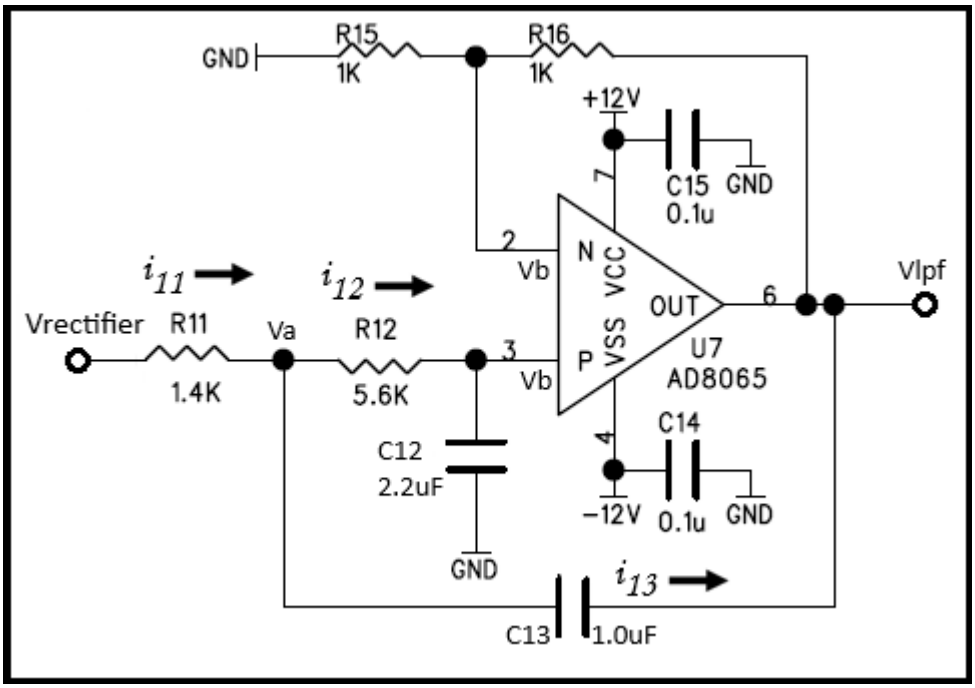


This is the standard Sallen-Key topography, and the components are set up to yield a low-pass filter. Full analysis of this circuit is shown below:

Apply Ohms Law to R15 and R16:

$$-V_b = i_b R_{15} \qquad V_b - V_0 = i_b R_{16}$$

$$\frac{V_b - V_0}{R_{16}} = \frac{-V_b}{R_{15}}$$

$$V_0 = V_b\left(1 + \frac{R_{16}}{R_{15}}\right) = gV_b \qquad \rightarrow \qquad V_b = \frac{V_o}{g}$$

This relates the voltage at the op amp inputs, $V_b$, to the amplifier output voltage, $V_0$. In the equations, $i_b$ is the current passing through $R_{15}$ and $R_{16}$. Now apply Ohms Law to the other circuits components noting that we will use the Laplace Transform notation for the capacitors:

$$Z_c(s) = \frac{1}{sC} \quad where\ s = j\omega \quad and \quad j = \sqrt{-1}$$

$$V_{in} - V_a = i_{11}R_{11} \qquad V_a - \frac{V_{out}}{g} = i_{12}R_{12} \qquad \frac{V_{out}}{g} = \frac{i_{12}}{sC_{12}} \qquad V_a - V_{out} = \frac{i_{13}}{sC_{13}}$$

And the current equation is: $i_{11} = \ i_{12} + i_{13}$

Substituting the voltages into the current equation we get the following:

$$\frac{V_i - V_a}{R_{11}} = \frac{sC_{12}V_0}{g} + sC_{13}(V_a - V_0) \qquad Eq.[1]$$

Also, the two Ohm's Law equations that refer to $i_{12}$ lead to the following equation:

$$\frac{\left(V_a - \frac{V_0}{g}\right)}{R_{12}} = \frac{sC_{12}V_0}{g} \qquad \rightarrow \qquad V_a = \frac{V_0}{g}(1 + sR_{12}C_{12})$$

Substitute this expression of $V_a$ into Eq.[1] to get:

$$\frac{V_i - \frac{V_0}{g}(1 + sR_{12}C_{12})}{R_{11}} = \frac{sC_{12}V_0}{g} + sC_{13}\left(\frac{V_0}{g}(1 + sR_{12}C_{12}) - V_0\right)$$

After some algebra this equation simplifies to the following:

$$V_0 = \frac{gV_{in}}{s^2R_{11}C_{12}R_{12}C_{13} + s\big(R_{11}C_{12} + R_{12}C_{12} + R_{11}C_{13}(1-g)\big) + 1}$$

$$let \ \ D = R_{11}C_{12}R_{12}C_{13} \ \ and \ \ B = \big(R_{11}C_{12} + R_{12}C_{12} + R_{11}C_{13}(1-g)\big)$$

The transfer function for this circuit is as follows:

$$T(s) = \frac{V_0}{V_{in}} = \frac{g}{Ds^2 + Bs + 1}$$

The frequency response is given by:

$$A(\omega) = |T(j\omega)| = \left|\frac{g}{(1 - D\omega^2) + j\omega B}\right| = \frac{g}{\sqrt{(1 - D\omega^2)^2 + B^2\omega^2}}$$

Using the component values in the schematic diagram:

$$D = R_{11}C_{12}R_{12}C_{13} = 1.7248e - 06$$

$$B = \big(R_{11}C_{12} + R_{12}C_{12} + R_{11}C_{13}(1-g)\big) = -0.00238$$

$$g = \left(1 + \frac{R_{16}}{R_{15}}\right) = 2$$

Also note: $V_b = \frac{V_o}{g} = \frac{V_o}{2}$.

A python script (SallenKey.py) was used to plot the data:

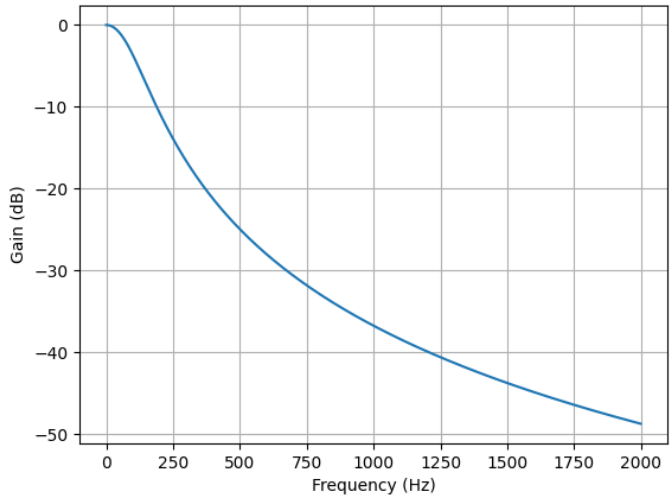


The 3dB cutoff frequency for this circuit is 89.4Hz. With such a low cutoff frequency the 1.8MHz input to the Rectifier Module is reduced to a very slowly varying level with a bandwidth of about 90Hz. Lowering the bandwidth can be accomplished by raising the capacitors (C12 and C13) by the same proportion. Use the python script to check that there is no peaking in the frequency response of the gain as is shown below:

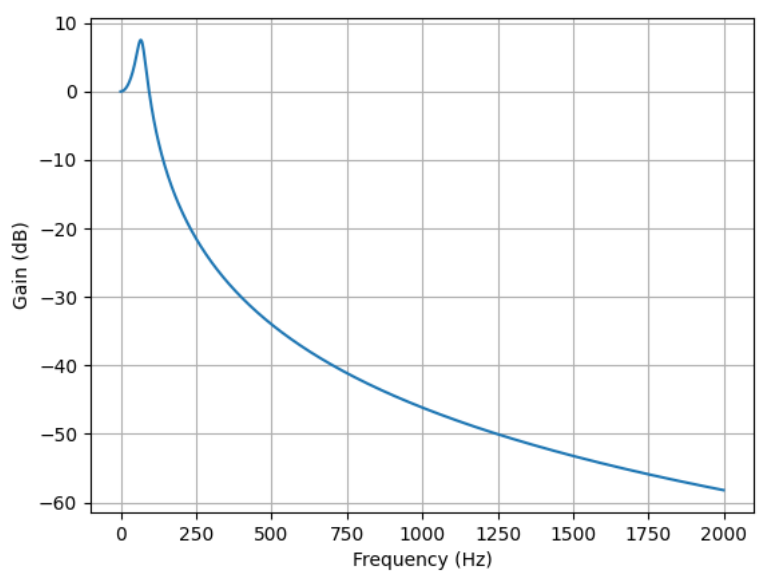


Adjustment of component values should be made to eliminate this peak ensuring the gain is always less than or equal to 0.

## Comparator and Hysteresis Circuit:

The output of the LPF is then sent to a comparator circuit and that diagram is shown below:

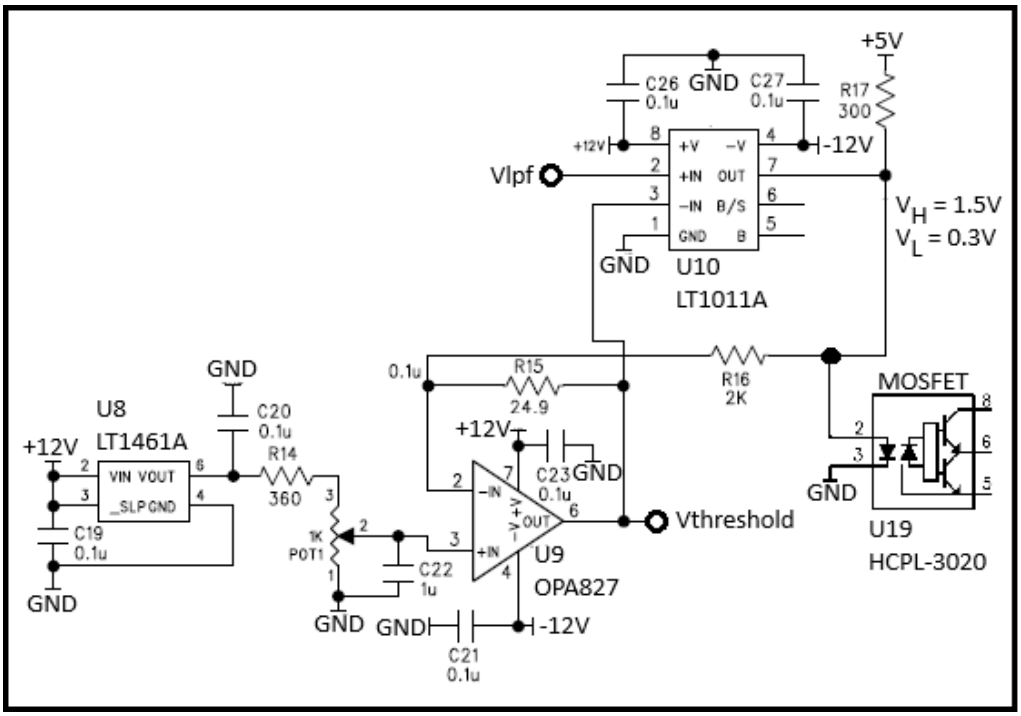


The signal from the LPF is compared to a threshold voltage to determine if the electron beam in the Storage Ring is above the limit for TOSS operations. The threshold voltage is generated by a 3.125V precision voltage reference at U8. A trim potentiometer (POT1) divides this voltage down to a range of 0 to 0.83 volts. An op amp (U9) is used to drive the threshold voltage to the comparator at U10 at the -IN input (pin 3). The op amp is also part of a hysteresis circuit where the output of the comparator is fed back to the amplifier to shift the threshold slightly when a transition occurs so that the comparator output transitions cleanly without any multiple pulsing from noise. The comparator output goes HIGH whenever $V_{LPF} > V_{thresh}$ and $V_H$ for the comparator it is 1.5V due to the diode voltage drop in the MOSFET at U19. The analysis of this hysteresis circuit is as follows:

$$V_{comp} = \begin{cases} 0.3V \;\; if \;\; V_{LPF} < V_{thresh} \\ 1.5V \;\; if \;\; V_{LPF} > V_{thresh} \end{cases}$$

$$0V < V_{pot} < 0.827V \qquad Set\ by\ POT1$$

$$V_{thresh} = \left(1 + \frac{R15}{R16}\right) V_{pot} - \frac{R15}{R16} V_{comp}$$

$$\frac{R15}{R16} = \frac{24.9}{2000} = 0.0125 \qquad V_{thresh} = (1.0125)V_{pot} - (0.0125)V_{comp}$$

$$If\ V_{LPF} < V_{thresh}: \qquad V_{thresh} = (1.0125)V_{pot} - 0.0037$$

$$If\ V_{LPF} > V_{thresh}: \qquad V_{thresh} = (1.0125)V_{pot} - 0.0187$$

For the SBCM, $V_{pot} \cong 1V$

$$If\,(V_{LPF} < V_{thresh})\ then\ V_{thresh} = 1.009V$$

$$If\,(V_{LPF} > V_{thresh})\ then\ V_{thresh} = 0.994V$$

Therefore, when the threshold is crossed as the signal rises, the threshold will drop by about 1.5% to quickly move the threshold away from the signal so that small noise on the signal does not cause the comparator to multiply pulse. If multiple pulses reach the safety-rated relay, the relay may lock up with the contacts open to protect its inner working. If this happens, the relay must be power cycled in to return it to normal operations. In the past, this has happened several times while injecting beam into the Storage Ring as the threshold voltage is being crossed. The opposite will happen as the signal drops. When crossed from above, the threshold will quickly rise by 1.5% back to the original value. The images below show the effect of hysteresis on the threshold level shown in RED. The YELLOW trace is the output of the LPF which indicates the intensity of the electron beam in the storage ring. The threshold shifts by about 1.5% which is equivalent to a 15mV shift in the threshold voltage. Note that when the shift occurs the threshold is moving away from the LPF output, reducing the chance for multiple pulses being generated.

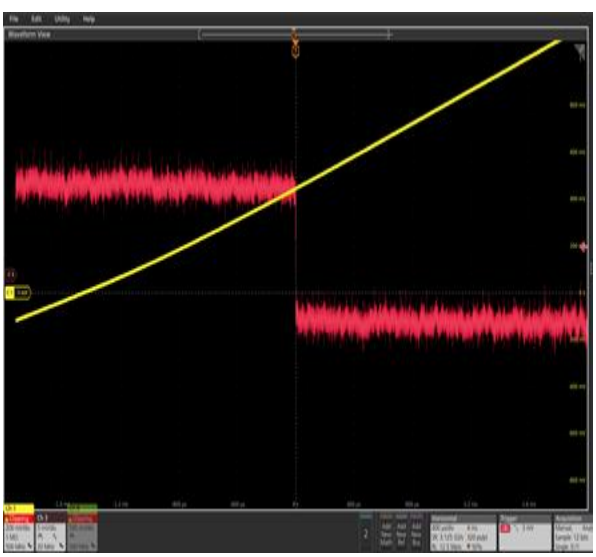

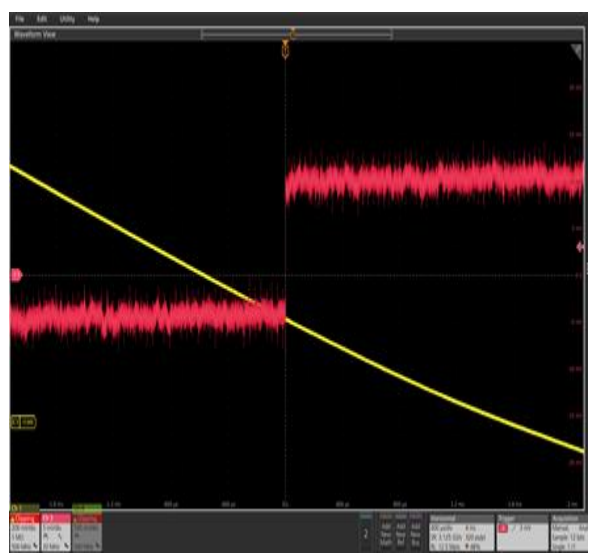

The output of the comparator goes to one of the inputs of a MOSFET AND circuit that will drive the safety relay.

## Bandpass Filter (BPF):

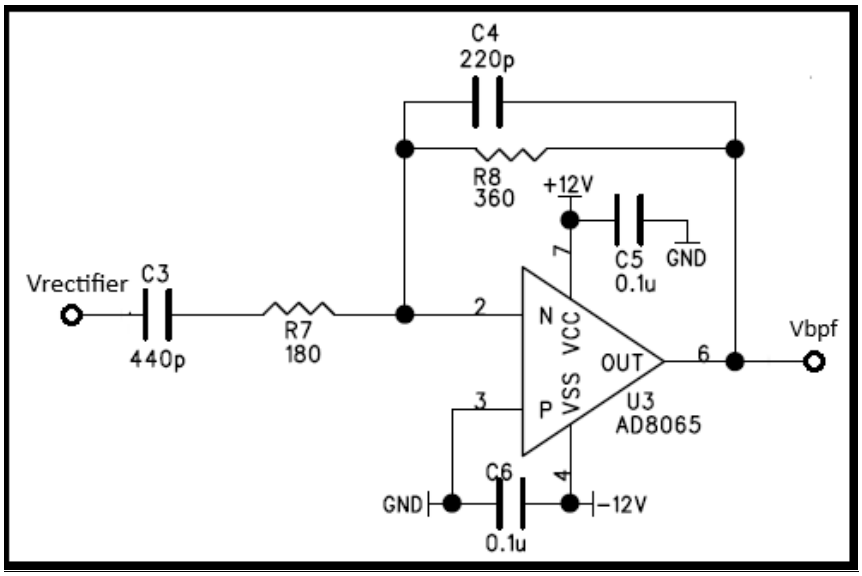


The BPF receives the transient signal from the rectifier circuit removes any DC component and high-frequency noise in that signal and passes the filtered signal to a zero-crossing circuit for further processing. The analysis of the BPF is as follows:

Using the Laplace notation for impedance:

$$Z_c(s) = \frac{1}{sC} \quad where\ s = j\omega \quad and \quad j = \sqrt{-1}$$

$$Z_R(s) = R$$

In general, for this topology:

$$V_{out} = -\frac{Z_2}{Z_1}V_{in} \quad \rightarrow \quad T(s) = \frac{V_{out}}{V_{in}} = \frac{Z_2(s)}{Z_1(s)}$$

For the circuit above:

$$Z_1(s) = \left(R_7 + \frac{1}{sC_3}\right) = \frac{1 + sR_7C_3}{sC_3}$$

$$Z_2(s) = \left(\frac{1}{R_8} + sC_4\right)^{-1} = \frac{R_8}{1 + sR_8C_4}$$

$$T(s) = \frac{Z_2(s)}{Z_1(s)} = \frac{\left(\frac{R_8}{1 + sR_8C_4}\right)}{\left(\frac{1 + sR_7C_3}{sC_3}\right)} = \frac{R_8}{R_7}\left(\frac{\left(\frac{1}{1 + sR_8C_4}\right)}{\left(\frac{1 + sR_7C_3}{sR_7C_3}\right)}\right)$$

$$let\colon\ g = \frac{R_8}{R_7}, \quad \omega_1 = \frac{1}{R_7C_3}, \quad \omega_2 = \frac{1}{R_8C_4}$$

Substitute these values to get:

$$T(s) = g\left(\frac{\left(\frac{1}{1 + \frac{s}{\omega_2}}\right)}{\left(\frac{1 + \frac{s}{\omega_1}}{\frac{s}{\omega_1}}\right)}\right) = g\left(\frac{\left(\frac{\omega_2}{\omega_2 + s}\right)}{\left(\frac{\omega_1 + s}{s}\right)}\right) = \frac{gs\omega_2}{(\omega_1 + s)(\omega_2 + s)}$$

$$T(s) = \frac{gs\omega_2}{s^2 + s(\omega_1 + \omega_2) + \omega_1\omega_2}$$

$$A(\omega) = \left|\frac{jg\omega_2\omega}{(\omega_1\omega_2 - \omega^2) + j\omega(\omega_1 + \omega_2)}\right| = \frac{g\omega_2\omega}{\sqrt{(\omega_1\omega_2 - \omega^2)^2 + \omega^2(\omega_1 + \omega_2)^2}}$$

A python script has been developed to plot this response for the component values in the diagram. That plot is shown below:

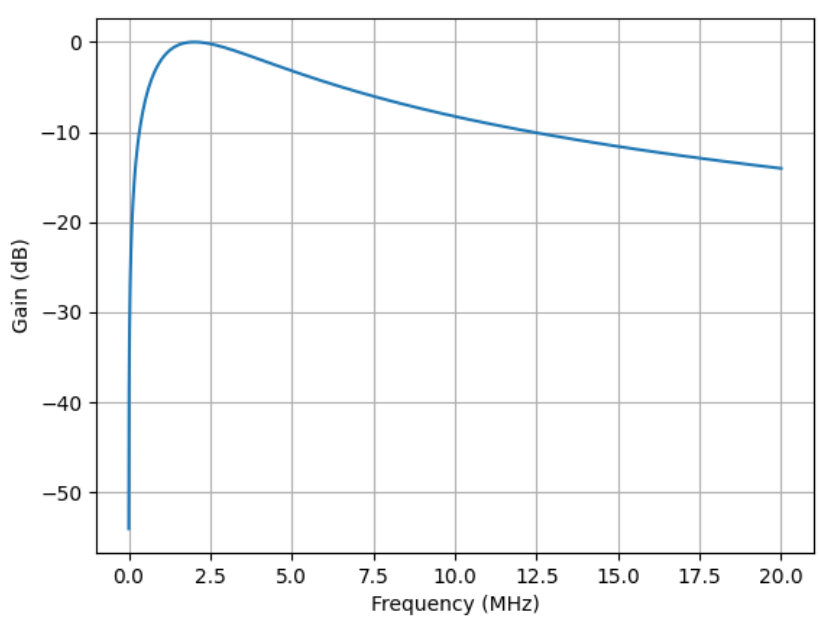

The bandwidth of the passband region is about 4MHz from 0.85 to 4.85MHz. The output of this filter is passed to a zero-crossing detector.

## Zero-Crossing Detection and WDT Circuit:

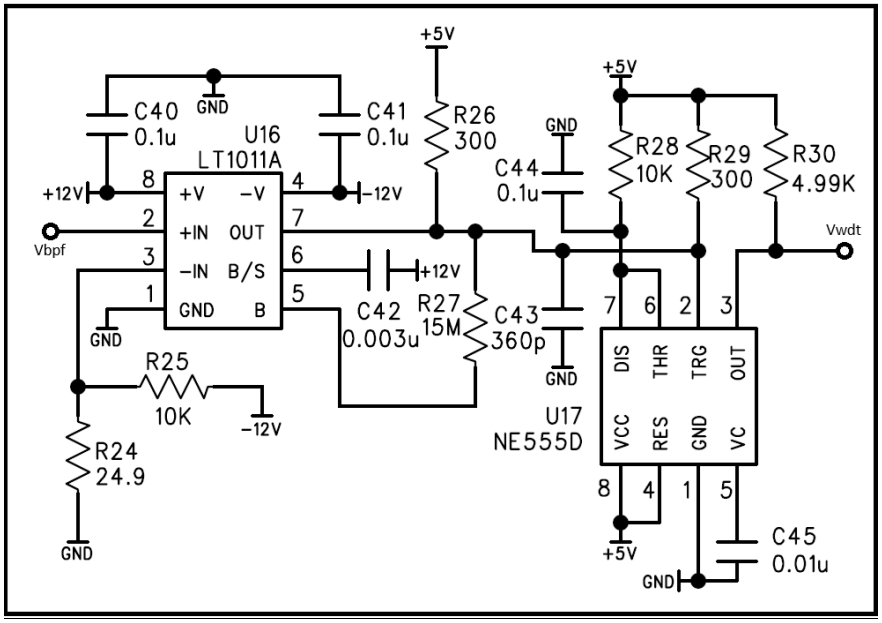


The output of the BPF is sent to the positive input of a comparator (U16). The comparator's negative input goes to a slightly negative fixed threshold voltage given by:

$$V_{th} = \frac{-12 * R_{24}}{R_{24} + R_{25}} = -0.03V$$

The value is negative because the gain of the BPF is also negative. Whenever the BPF signal crosses this threshold voltage the comparator output will toggle between 0 and 5 volts. This output signal is passed to a retriggerable one-shot circuit at U17. The component values are such that if the comparator output is toggling at a rate greater than 1KHz the one-shot output will remain high. If the rate drops below 1KHz the one-shot can internally reset and the output will go LOW which will open the safety-rated relay's contacts for the PPS. The output of the WDT goes to the second input of the MOSFET AND circuit that will drive the safety-rated relay.

## MOSFET AND Circuit:

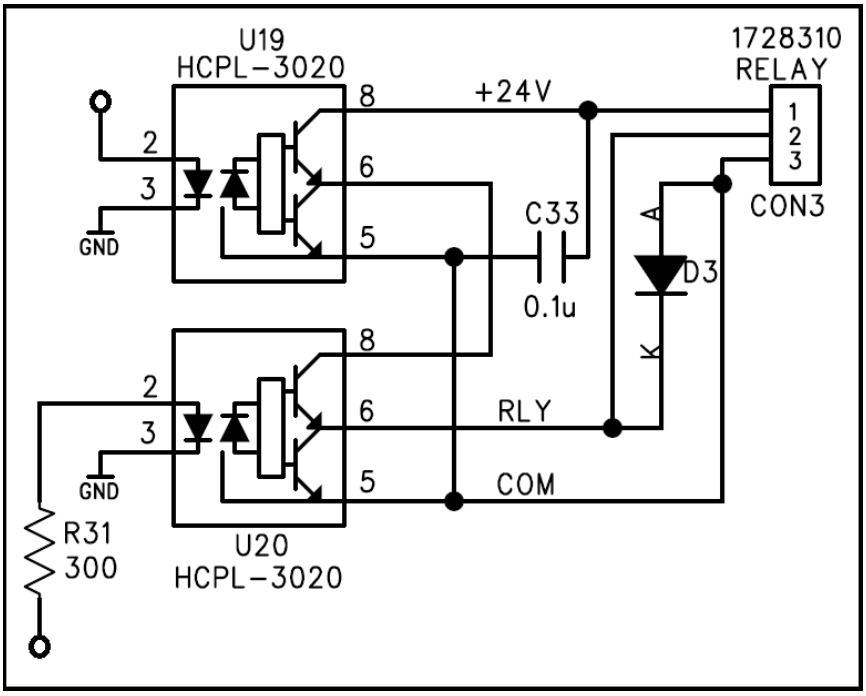


The driver for the safety-rated relay consists of two optically isolated MOSFETs (U19 and U20). The isolated input (pin 2) of U19 is driven by the comparator (U10) and the input of U20 is driven by the output of the WDT circuit. The arrangement shown in the diagram forms an AND gate. If both inputs to the MOSFETs are HIGH then the contacts on the safety relay will close indicating that the interlock for the SBCM is satisfied. The isolated MOSFETs were necessary because the relay runs on +24VDC and the module circuit runs on +/-12VDC. If either input is LOW the relay contacts will open inhibiting TOSS operations.